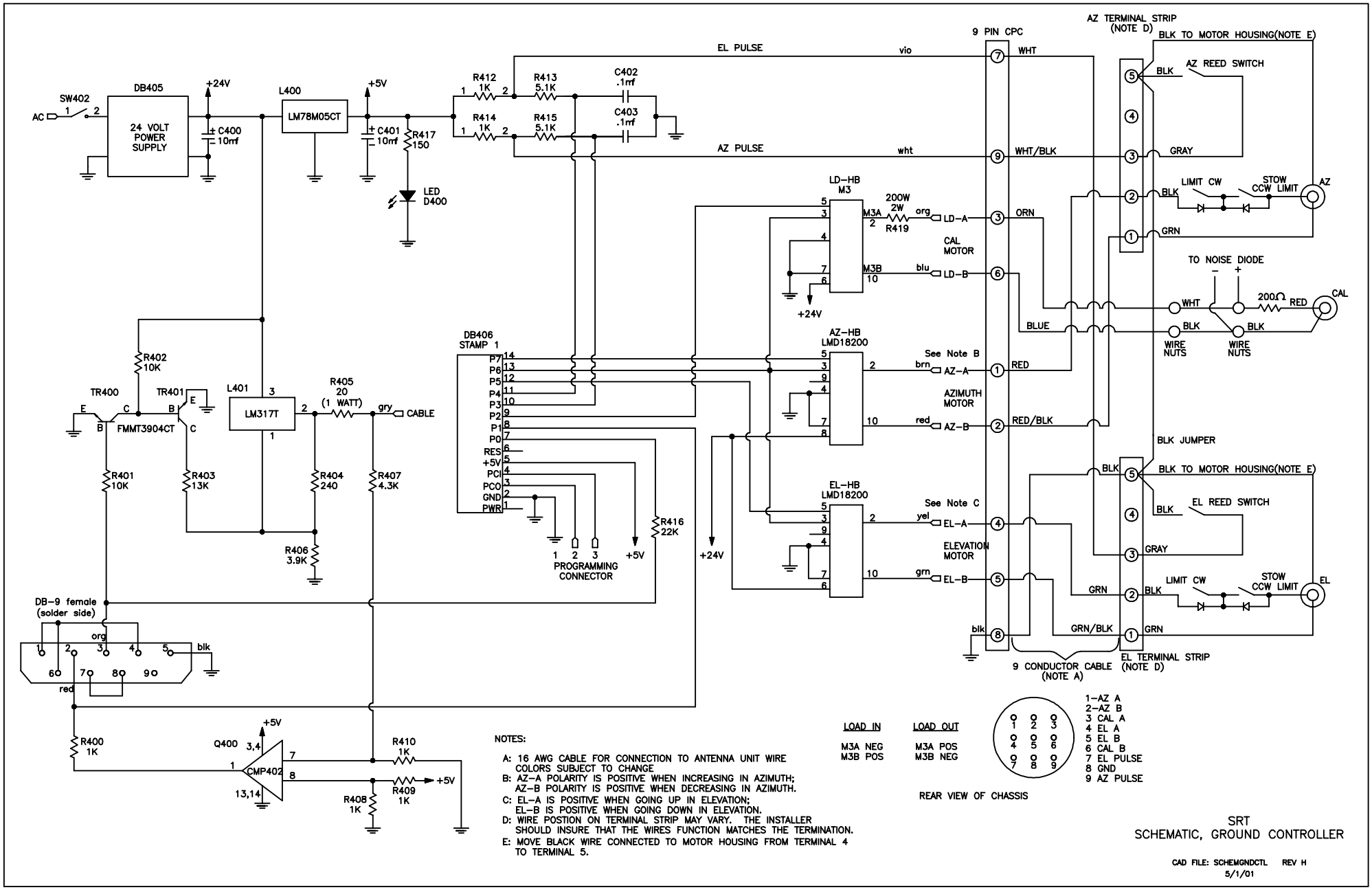
AC
SW402
DB405
24 VOLT POWER SUPPLY
+24V
C400 10mf
L400
LM78M05CT
+5V
C401 10mf
R417 150
LED D400
R412 1K
R413 5.1K
R414 1K
R415 5.1K
C402 .1mf
C403 .1mf
EL PULSE
vio
AZ PULSE
wht
9 PIN CPC
WHT
WHT/BLK
ORN
BLUE
RED
RED/BLK
GRN
GRN/BLK
blk
AZ TERMINAL STRIP (NOTE D)
BLK TO MOTOR HOUSING(NOTE E)
AZ REED SWITCH
BLK
GRAY
LIMIT CW
STOW CCW LIMIT
AZ
TO NOISE DIODE
200Ω
RED
CAL
WIRE NUTS
BLK JUMPER
EL REED SWITCH
EL
LD-HB M3
M3A
M3B
200W 2W R419
org
blu
LD-A
LD-B
CAL MOTOR
AZ-HB LMD18200
See Note B
brn
red
AZ-A
AZ-B
AZIMUTH MOTOR
EL-HB LMD18200
See Note C
yel
grn
EL-A
EL-B
ELEVATION MOTOR
DB406 STAMP 1
P7
P6
P5
P4
P3
P2
P1
P0
RES
+5V
PCI
PCO
GND
PWR
PROGRAMMING CONNECTOR
R416 22K
R402 10K
TR400
TR401
FMMT3904CT
L401
LM317T
R405 20 (1 WATT)
gry
CABLE
R401 10K
R403 13K
R404 240
R407 4.3K
R406 3.9K
DB-9 female (solder side)
org
blk
red
R400 1K
Q400
CMP402
R410 1K
R409 1K
R408 1K
9 CONDUCTOR CABLE (NOTE A)
EL TERMINAL STRIP (NOTE D)
LOAD IN
M3A NEG
M3B POS
LOAD OUT
M3A POS
M3B NEG
REAR VIEW OF CHASSIS
1-AZ A
2-AZ B
3 CAL A
4 EL A
5 EL B
6 CAL B
7 EL PULSE
8 GND
9 AZ PULSE
NOTES:
A: 16 AWG CABLE FOR CONNECTION TO ANTENNA UNIT WIRE COLORS SUBJECT TO CHANGE
B: AZ-A POLARITY IS POSITIVE WHEN INCREASING IN AZIMUTH; AZ-B POLARITY IS POSITIVE WHEN DECREASING IN AZIMUTH.
C: EL-A IS POSITIVE WHEN GOING UP IN ELEVATION; EL-B IS POSITIVE WHEN GOING DOWN IN ELEVATION.
D: WIRE POSTION ON TERMINAL STRIP MAY VARY. THE INSTALLER SHOULD INSURE THAT THE WIRES FUNCTION MATCHES THE TERMINATION.
E: MOVE BLACK WIRE CONNECTED TO MOTOR HOUSING FROM TERMINAL 4 TO TERMINAL 5.
SRT
SCHEMATIC, GROUND CONTROLLER
CAD FILE: SCHEMGNDCTL REV H
5/1/01