CHANGE LETTER	DWN BY	CHK BY	APPD BY	DATE	DCN & DESCRIPTION
–	RF			11/6/98	Initial issue
A	CJG			1/18/99	Change the graychip
B	CJG			1/25/99	Changed values & added ref. des.
C	CJG			1/31/99	Changed the DC/DC Converter to Step-down Converter
D	CJG			2/5/99	Changed values & added ref. des.
E	CJG			3/1/99	Changed values

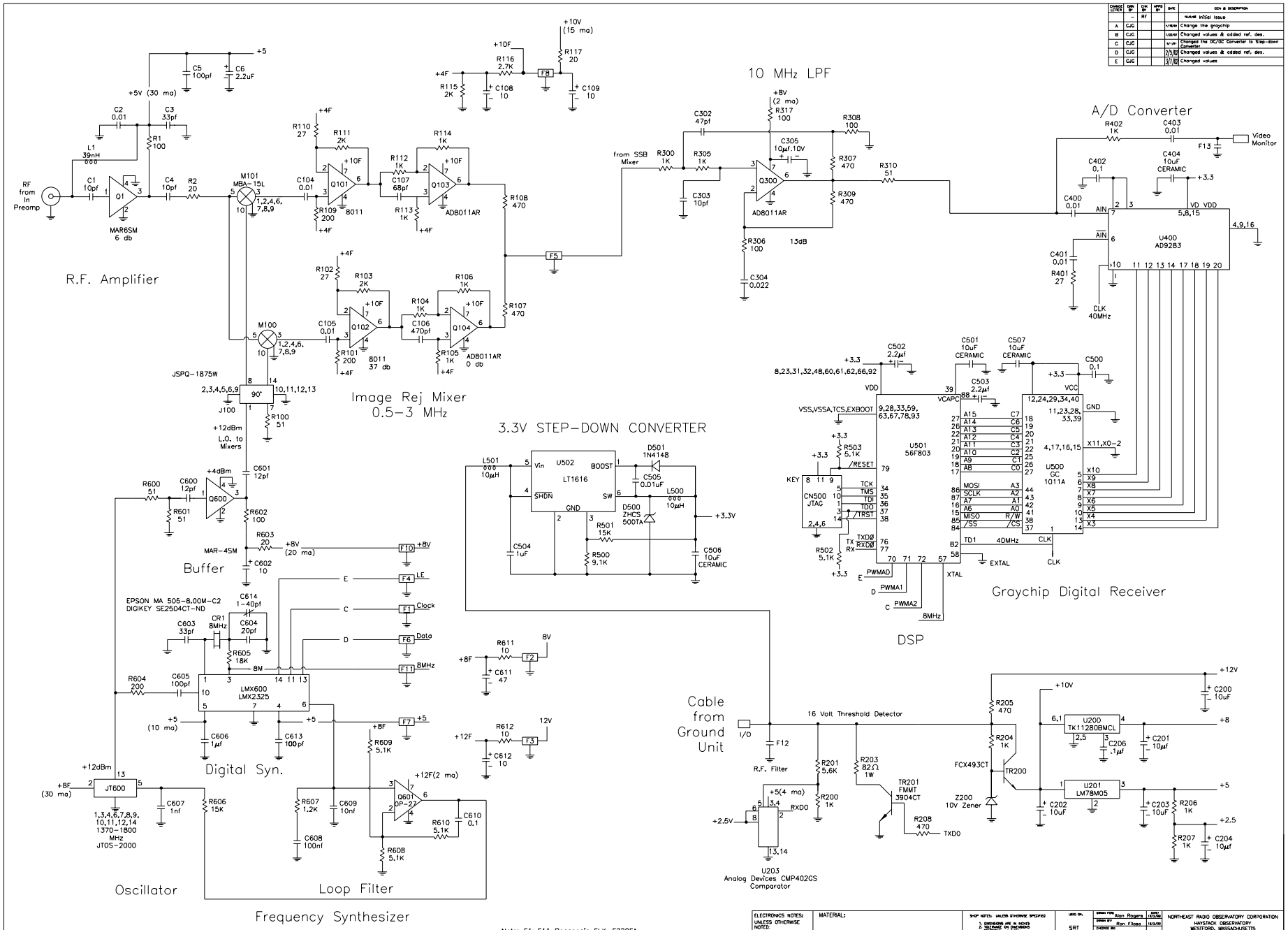

Note: F1–F11 Panasonic ELK–E220FA
(Digikey P9871CT–ND)
F12–F13 Panasonic EXC–ECT220MBT
(Digikey P9833CT–ND)

ELECTRONICS NOTES: UNLESS OTHERWISE NOTED:	MATERIAL: –	SHOP NOTES: UNLESS OTHERWISE SPECIFIED 1. DIMENSIONS ARE IN INCHES 2. TOLERANCE ON DIMENSIONS FRACTIONAL: ± 1/16 DECIMAL .XX ± .010 DECIMAL .XXX ± .005 ANGULAR ± 0.5°-00 3. ALL SHARP EDGES TO BE FILE OR BLUNTED 4. REMOVE BURRS AND BREAK SHARP EDGES, 1/64 MAX. 5. SURFACE FINISH 125 RMS STD-B 6. ALL DIMENSIONS TO APPLY BEFORE PLATING OR CONVERSION COATING.	USED ON: SRT	DRAWN FOR: Alan Rogers 10/5/98 DRAWN BY: Ron Filosa 10/5/98 CHECKED BY: PROJECT: ENGINEER: MFG. & PROCESS: SPECIFICATION: THERMAL: MECH. ANALYSIS:	NORTHEAST RADIO OBSERVATORY CORPORATION HAYSTACK OBSERVATORY WESTFORD, MASSACHUSETTS Schematic, Digital Receiver
RESISTORS: –			
INDUCTORS: –	FINISH AND/OR HEAT TREATMENT: –		
CAPACITORS: –			
		NEXT ASSEMBLY: WEIGHT: SCALE: –	SCHEMRECDIG.DWG CAD FILE: E SCHEMRECDIG REV E